COOKING PASSION SINCE 1877

N 50, BUILT-IN FRIDGE-FREEZER WITH FREEZER AT BOTTOM, 177.2 X 54.1 CM, SLIDING HINGE KI5872SE0G

A↑G E

This built-in fridge-freezer with Fresh Safe keeps fruits and vegetables fresher for longer

- √ Eco Air Flow – Even air circulation for constant temperatures and fast cooling.
- √ LowFrost: Reduces frost in the freezer compartment for faster defrosting.
- √ BigBox: An abundance of storage space even for large and bulky items.
- √ LED Light – Illuminate your fridge with long-life LEDs.
- √ Adjustable Glass Shelves – Height adjustable shelves create the space you need for inspiring dishes in your fridge

Features

Technical Data

Energy Efficiency Class: ..... E
Average annual energy consumption in kilowatt hour per year (kWh/a): ..... 216 kWh/a
Sum of volume of frozen compartments: ..... 70 l
Sum of volume of chill compartments: ..... 200 l
Airborne acoustical noise emissions : ..... 35 dB(A) re 1 pW
Airborne acoustical noise emission class: ..... B
Construction type: ..... Built-in
Door panel options: ..... Not possible
Height: ..... 1772 mm
Width of the appliance: ..... 541 mm
Depth of the product: ..... 550 mm
Min. required niche size for installation (HxWxD): .. 1775.0 x 560 x 550 mm
Net weight: ..... 50.9 kg
Fuse protection: ..... 10 A
Door hinge: ..... Right reversible
Voltage: ..... 220-240 V
Length of electrical supply cord: ..... 230.0 cm
Number of compressors: 1
Number of independent cooling systems: 1
Interior ventilator: ..... No
Reversible Door Hinge: ..... Yes
Number of Adjustable Shelves in fridge compartment (Stck): 4
Shelves for Bottles: ..... No
Frost free system: ..... No
Installation type: ..... Full-integrated
Type of hinge: ..... Follow-door

4 242004 251941

Optional accessories

GS6B0BZ0	Box-in-Freezer-Box
KS6B0RZ0	Bottle Rack
KS9E0FZ0	Package Neff FlexCooling
KSGG0MZ0	Butter box

N 50, BUILT-IN FRIDGE-FREEZER WITH FREEZER AT BOTTOM, 177.2 X 54.1 CM, SLIDING HINGE KI5872SE0G

Features

- easy Installation

Functions
- Bright interior LED fridge light in fridge section

Design features
- Electronic control (LED chain)
- Super Cooling: No
- SuperFreeze function with automatic deactivation
- Acoustic door open warning indicator

Design features
- 5 safety glass shelves in fridge compartment of which 4 are height adjustable
- 4 door trays, including 1x dairy compartment
- 1 removable door storage compartments.
- 4 door bins

Freshness System
- 1 FreshSafe drawer with humidity control retains freshness for longer.

Food freshness system
- lowFrost freezer
- 2 transparent freezer drawers, 1 bigbox

Dimension and installation
- Dimensions: 177.2 cm H x 54.1 cm W x 54.8 cm D
- Niche Dimensions: 177.5 cm H x 56 cm W x 55 cm D

Key features - Fridge section
- Right hinged door, reversible
- 220 - 240 V

Key features - Freezer section
- 2 x egg tray, 1 x ice cube tray

Country Specific Options
- Based on the results of the standard 24-hour test. Actual consumption depends on usage/position of the appliance.

Design features

Dimension and installation

Additional features

Performance and Consumption
- EU19_EEK_D: E
- Total Volume : 270 l
- Net Fridge Volume : 200 l
- Net Freezer Volume : 70 l
- Net 4* compartment volume : 70 l
- Freezing capacity 24h : 3.2 kg
- Annual Energy Consumption: 216 kWh/a
- Climate Class: SN-ST
- Noise Level : 35 dB , EU19_Noise emission class_D: B
- Temperature rise time : EU19_Temperature rise time_D: 12 H

N 50, BUILT-IN FRIDGE-FREEZER WITH FREEZER AT BOTTOM, 177.2 X 54.1 CM, SLIDING HINGE KI5872SE0G
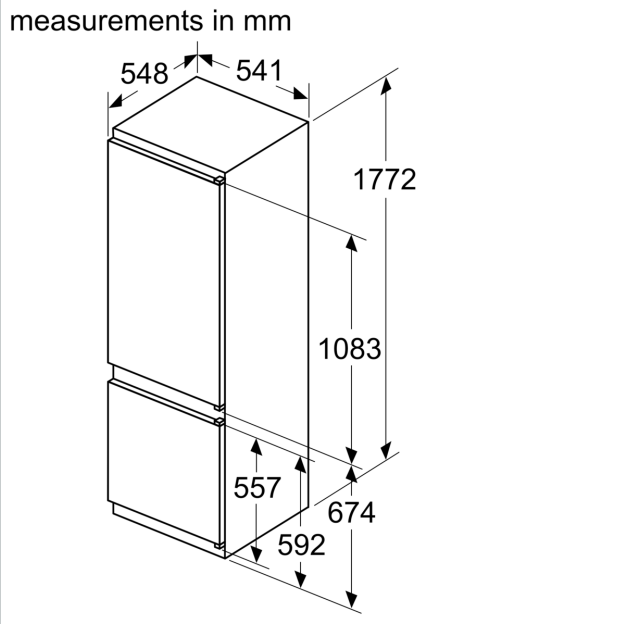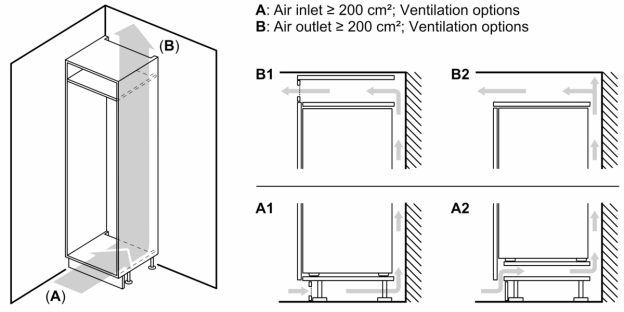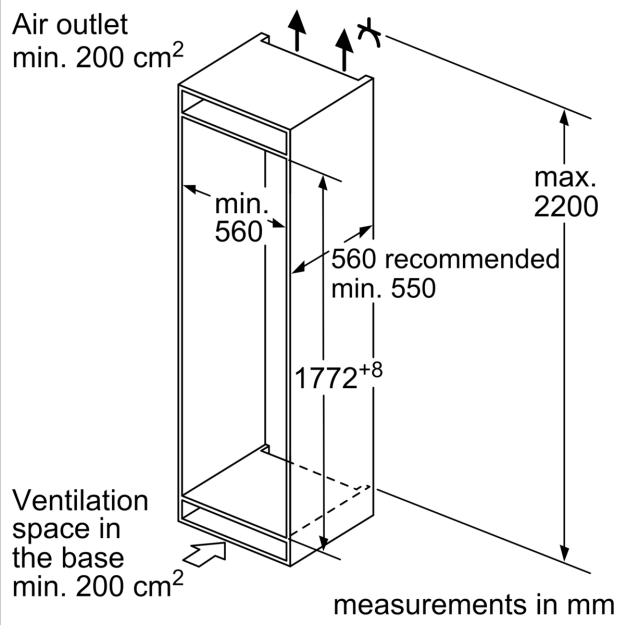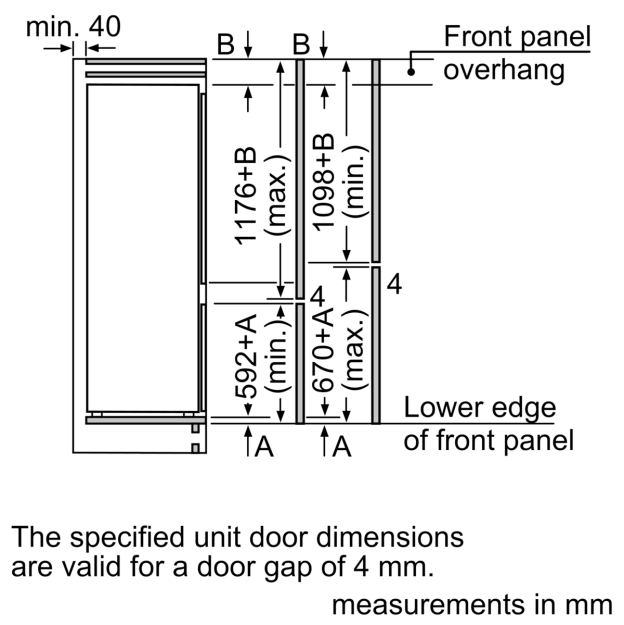
Dimensioned drawings