NEFF

Dishwasher

[en] User manual

**S353ITX02G**

# Table of contents

**Safety ..... 4**
General information ..... 4
Intended use ..... 4
Restriction on user group ..... 4
Safe installation ..... 4
Safe use ..... 6
Damaged appliance ..... 7
Risk to children ..... 8

**Preventing material damage ..... 10**
Safe installation ..... 10
Safe use ..... 10

**Environmental protection and saving energy ..... 11**
Disposing of packaging ..... 11
Saving energy ..... 11
AquaSensor ..... 11

**Installation and connection ..... 11**
Scope of supply ..... 11
Installing and connecting the appliance ..... 11
Drainage connection ..... 12
Drinking water connection ..... 12
Electrical connection ..... 12

**Familiarising yourself with your appliance ..... 14**
Appliance ..... 14
Controls ..... 15

**Programmes ..... 17**
Information for test institutes ..... 18

**Additional functions ..... 18**

**Features ..... 19**
Top basket ..... 19
Bottom basket ..... 19
Cutlery basket ..... 20
Etagere ..... 20
Baking sheet spray head ..... 20

**Before using for the first time ..... 21**
Performing the initial configuration ..... 21

**Water softening system ..... 21**
Overview of water hardness settings ..... 21
Setting the water softening system ..... 22
Special salt ..... 22
Switching off the water softening system ..... 23
Regeneration of the water softening system ..... 23

**Rinse aid system ..... 24**
Rinse aid ..... 24
Setting the amount of rinse aid ..... 24
Switching the rinse aid system off ..... 25

**Detergent ..... 25**
Suitable detergents ..... 25
Unsuitable detergents ..... 26
Information on detergents ..... 26
Adding detergent ..... 27

**Tableware ..... 27**
Damage to glass and tableware ..... 28
Arrange tableware ..... 28
Removing tableware ..... 29

**Basic operation ..... 29**
Opening appliance door ..... 29
Switching on the appliance ..... 29
Setting a programme ..... 30
Setting additional functions ..... 30
Setting timer programming[1] ..... 30
Starting the programme ..... 30

[1] Depending on the appliance specifications

Interrupting programme ..... 30
Terminate programme..... 31
Switching off appliance ..... 31

**Basic settings..... 32**
Overview of basic settings ..... 32

**Cleaning and servicing ..... 33**
Cleaning the tub ..... 33
Cleaning products ..... 33
Tips on appliance care..... 33
Easy Clean Easy Clean ..... 34
Filter system ..... 35
Cleaning spray arms ..... 36

**Troubleshooting..... 37**
Error code / Fault display / Signal..... 37
Washing results..... 38
Information on display panel..... 45
Malfunctions ..... 45
Mechanical damage..... 46
Noise ..... 46
Clean wastewater pump..... 48

**Transportation, storage and disposal ..... 48**
Removing the appliance ..... 48
Protect appliance from frost..... 49
Transporting the appliance ..... 49
Disposing of old appliance ..... 49

**Customer Service..... 49**
Product number (E-Nr.), production number (FD) and consecutive numbering (Z-Nr.) ..... 50
AQUA-STOP guarantee..... 50

**Technical specifications..... 50**
Information regarding Free and Open Source Software..... 51

# ⚠ Safety

Observe the following safety instructions.

## General information

- Read this instruction manual carefully.
- Keep the instruction manual and the product information safe for future reference or for the next owner.
- Do not connect the appliance if it has been damaged in transit.

## Intended use

Only use this appliance:
- For cleaning household tableware.
- In private households and in enclosed spaces in a domestic environment.
- Up to an altitude of 4000 m above sea level.

## Restriction on user group

This appliance may be used by children aged 8 or over and by people who have reduced physical, sensory or mental abilities or inadequate experience and/or knowledge, provided that they are supervised or have been instructed on how to use the appliance safely and have understood the resulting dangers.
Children must not play with the appliance.
Cleaning and user maintenance must not be performed by children unless they are being supervised.
Keep children under the age of 8 years away from the appliance and power cable.

## Safe installation

⚠ **WARNING – Risk of injury!**
Improper installation may cause injury.
- ▶ When installing and connecting the appliance, follow the instructions in the manual and installation instructions.

⚠ **WARNING – Risk of electric shock!**

- Incorrect installation is dangerous.
  - ▶ Connect and operate the appliance only in accordance with the specifications on the rating plate.
  - ▶ Always use the supplied power cable for the new appliance.
  - ▶ Connect the appliance to a power supply with alternating current only via a properly installed socket with earthing.
  - ▶ The protective conductor system of the domestic electrical installation must be properly installed.
  - ▶ Never equip the appliance with an external switching device, e.g. a timer or remote control.
  - ▶ When the appliance is installed, the mains plug of the power cord must be freely accessible. If free access is not possible, an all-pole isolating switch must be installed in the permanent electrical installation according to the installation regulations.
  - ▶ When installing the appliance, check that the power cable is not trapped or damaged.
- Cutting through the supply hose or immersing the Aqua-Stop valve in water is dangerous.
  - ▶ Never immerse the plastic housing in water. The plastic housing on the supply hose contains an electric valve.
  - ▶ Never cut through the supply hose. The supply hose contains electric power cables.

⚠ **WARNING – Risk of fire!**

It is dangerous to use an extended power cord and non-approved adapters.

- ▶ Do not use extension cables or multiple socket strips.
- ▶ If the power cord is too short, contact Customer Service.
- ▶ Only use adapters approved by the manufacturer.

⚠ **WARNING – Risk of injury!**
Hinges move when opening and closing the appliance door and can cause injury.
- ▶ If built-under or integrable appliances are not in a cavity so that one side is accessible, the hinge area must be covered at the side. Covers are available from Customer Service or specialist outlets.

⚠ **WARNING – Risk of tipping!**
Improper installation may cause the appliance to tip up.
- ▶ Only install built-under or integrable appliances under a continuous worktop that is securely connected to adjacent cabinets.

## Safe use

⚠ **WARNING – Risk of serious harm to health!**
Failure to comply with safety instructions and directions for use on packagings of detergent and rinse aid products may cause serious harm to health.
- ▶ Follow the safety instructions and directions for use on the packagings of detergent and rinse aid products.

⚠ **WARNING – Risk of explosion!**
- Adding solvents to the interior of the appliance may cause explosions.
  - ▶ Never add solvents to the interior of the appliance.
- Highly caustic alkaline or highly acidic cleaning agents in conjunction with aluminium parts in the interior of the appliance may cause explosions.
  - ▶ Never use highly caustic alkaline or highly acidic cleaning agents, in particular commercial or industrial products, in conjunction with aluminium parts (e.g. grease filters of extractor hoods or aluminium pans), e.g. for the Machine Care programme.

⚠ **WARNING – Risk of injury!**

- Leaving the appliance door open may result in injury.
  - ▶ Only open the appliance door to load or unload tableware in order to prevent accidents, e.g. through tripping.
  - ▶ Do not sit or stand on the appliance door when open.
- Knives and utensils with sharp points can cause injuries.
  - ▶ Arrange knives and utensils with sharp points in the cutlery basket with the points downwards, on the knife shelf or in the cutlery drawer.

⚠ **WARNING – Risk of scalding!**

If you open the appliance door while the programme is running, hot water may splash out of the appliance.

- ▶ Open the appliance door carefully if the programme is still running.

⚠ **WARNING – Risk of electric shock!**

- An ingress of moisture can cause an electric shock.
  - ▶ Only use the appliance in enclosed spaces.
  - ▶ Never expose the appliance to intense heat or humidity.
  - ▶ Do not use steam- or high-pressure cleaners to clean the appliance.
- If the insulation of the power cord is damaged, this is dangerous.
  - ▶ Never let the power cord come into contact with hot appliance parts or heat sources.
  - ▶ Never let the power cord come into contact with sharp points or edges.
  - ▶ Never kink, crush or modify the power cord.

## Damaged appliance

⚠ **WARNING – Risk of electric shock!**

- If the appliance or the power cord is damaged, this is dangerous.
  - ▶ Never operate a damaged appliance.
  - ▶ Never operate an appliance with a cracked or fractured surface.

- ▶ Never pull on the power cord to unplug the appliance. Always unplug the appliance at the mains.
- ▶ If the appliance or the power cord is damaged, immediately unplug the power cord or switch off the fuse in the fuse box and turn off the water tap.
- ▶ "Call customer services." → *Page 49*

■ Incorrect repairs are dangerous.
- ▶ Repairs to the appliance should only be carried out by trained specialist staff.
- ▶ Only use genuine spare parts when repairing the appliance.
- ▶ If the power cord of this appliance is damaged, it must be replaced with a special connection cable, which is available from the manufacturer or his Customer Service.

## Risk to children

⚠ **WARNING – Risk of suffocation!**

■ Children may put packaging material over their heads or wrap themselves up in it and suffocate.
- ▶ Keep packaging material away from children.
- ▶ Do not let children play with packaging material.

■ Children may breathe in or swallow small parts, causing them to suffocate.
- ▶ Keep small parts away from children.
- ▶ Do not let children play with small parts.

■ Children may become trapped in the appliance and suffocate.
- ▶ Use the childproof lock if fitted.
- ▶ Never let children play with or operate the appliance.

⚠ **WARNING – Risk of harm to health!**

Children can lock themselves in the appliance, thereby putting their lives at risk.
- ▶ With redundant appliances, unplug the power cord. Then cut through the cord and damage the lock on the appliance door beyond repair so that the appliance door will no longer close.

⚠ **WARNING – Risk of crushing!**
With higher-level appliances, children can become crushed between the appliance door and cabinet doors underneath.
- ▶ Keep an eye on children when opening and closing the appliance door.

⚠ **WARNING – Risk of chemical burns!**
Rinse aid and detergent may cause chemical burns to the mouth, throat and eyes.
- ▶ Keep children away from detergent and rinse aid products.
- ▶ Keep children away from the appliance when open. The water in the interior of the dishwasher is not drinking water. It may contain residues of detergents and rinse aid.

⚠ **WARNING – Risk of injury!**
Children may get their fingers caught in the slots of the tablet collecting tray and injure themselves.
- ▶ Keep children away from the appliance when open.

# Preventing material damage

## Safe installation

**ATTENTION!**

- Improper installation of the appliance may cause damage.
  - ▸ If the dishwasher is installed above or below other domestic appliances, follow the information on installation in combination with a dishwasher in the installation instructions for the individual appliances.
  - ▸ If there is no information or if the installation instructions do not include the relevant information, contact the manufacturer of these appliances to check that the dishwasher can be installed above or below these appliances.
  - ▸ If no information is available from the manufacturer, the dishwasher should not be installed above or below such appliances.
  - ▸ To ensure the safe operation of all domestic appliances, continue following the installation instructions for the dishwasher.
  - ▸ Do not install the dishwasher under a hob.
  - ▸ Do not install the dishwasher near heat sources, e.g. radiators, heat storage tanks, ovens or other appliances that generate heat.
- Modified or damaged water hoses may result in material damage and damage to the appliance.
  - ▸ Never kink, crush, modify or cut through water hoses.
  - ▸ Only use the water hoses supplied with the appliance or genuine spare hoses.
  - ▸ Never re-use water hoses that have been used before.
- If the water pressure is too high or too low, the appliance may not be able to operate properly.
  - ▸ Make sure that the water pressure in the water supply system is min. 50 kPa (0.5 bar) and max. 1000 kPa (10 bar).
  - ▸ If the water pressure exceeds the maximum value specified, a pressure-reducing valve must be installed between the drinking water connection and the hose set of the appliance.

## Safe use

**ATTENTION!**

- Escaping water vapour can damage fitted units.
  - ▸ When the programme ends, leave the appliance to cool down for a while before opening the door.
- Special salt for dishwashers can damage the tub due to corrosion.
  - ▸ To make sure that any special salt that escapes is washed out of the tub, add the special salt to the dispenser for special salt immediately before the programme starts.
- Detergent may damage the water softening system.
  - ▸ Only fill the dispenser of the water softening system with special dishwasher salt.
- Unsuitable cleaning agents may damage the appliance.
  - ▸ Do not use a steam cleaner.
  - ▸ So as not to scratch the finish on the appliance, do not use sponges with a rough surface or abrasive cleaning agents.

- To prevent corrosion, do not use sponge cloths on dishwashers with a stainless steel front or rinse such cloths thoroughly several times before using them for the first time.

# Environmental protection and saving energy

## Disposing of packaging

The packaging materials are environmentally compatible and can be recycled.

- Sort the individual components by type and dispose of them separately.

## Saving energy

If you follow these instructions, your appliance will use less electricity and less water.

Use the Eco 50 ° programme.

+ The Eco 50 ° programme is energy-efficient and environmentally friendly.
→ *"Programmes", Page 17*

## AquaSensor

The AquaSensor is an optical measuring device (light barrier) which measures the turbidity of the rinsing water. You can save water with the AquaSensor.
Use of the AquaSensor depends on the programme. If the soiling level is high, the rinsing water is drained off and replaced with fresh water. If the soiling level is lower, the rinsing water is used in the next wash cycle, so reducing water consumption by 3-6 litres. In the automatic programmes the temperature and run time are additionally adjusted to the level of soiling.

# Installation and connection

To ensure proper operation, connect the appliance to the power and water supply correctly. Observe the specified criteria and the installation instructions.

## Scope of supply

After unpacking all parts, check for any damage in transit and completeness of the delivery.
If you have any complaints, contact the dealer who sold you the appliance or our Customer Service.

**Note:** The appliance has been tested at the factory to check it is in working order. It is possible that water has left marks on the appliance. These marks will disappear after the first wash cycle.

The delivery consists of the following:
- Dishwasher
- Operating instructions
- Installation Instructions
- Further information documents
- Installation material
- Steam guard plate
- Mains cable
- Quick reference guide

## Installing and connecting the appliance

You can position your built-under or integrable appliance in a fitted kitchen between wooden and plastic walls. If you subsequently install your dishwasher as a free-standing appli-

ance, you must stop it from tipping over, e.g. by screwing it to the wall or installing it under a continuous worktop that is securely connected to adjacent cabinets.

1. "Follow the safety instructions." → *Page 4*
2. "Follow the instructions for electrical connection." → *Page 12*
3. Check the Scope of supply and the condition of the appliance.
4. Consult the installation instructions for the installation dimensions required.
5. Make the appliance level using the height-adjustable feet.

   Make sure that the appliance is standing on the floor securely.
6. "Install the drainage connection." → *Page 12*
7. "Install the drinking water connection." → *Page 12*
8. Connect the appliance to the power supply.

## Drainage connection

Connect your appliance to drainage connection so dirty water is discharged via the wash cycle.

### Installing the drainage connection

1. Consult the installation instructions supplied for the steps required here.
2. Connect the wastewater hose to the outlet connection of the siphon using the enclosed parts.
3. When doing so, check that the wastewater hose is not kinked, crushed or twisted.
4. Also check that there is no cover in the drainage system preventing the wastewater from being discharged.

## Drinking water connection

Connect your appliance to a drinking water connection.

### Installing the drinking water connection

**Note**

- If you are replacing the appliance, you must use a new water supply hose.

1. Consult the installation instructions supplied for the steps required here.
2. Connect the appliance to the drinking water connection using the enclosed parts.

   Observe the "Technical data" → *Page 50*.
3. When doing so, check that the drinking water connection is not kinked, crushed or twisted.

## Electrical connection

Connect your appliance to the power supply.

### Connecting the appliance to the electricity supply

**Notes**

- Please follow the "Safety instructions" → *Page 4*.
- Connect the appliance to alternating current only, in the range of 220 - 240 V and 50 Hz or 60 Hz.
- Please note that the water safety system is only functional if there is a power supply.

1. Insert the non-heating appliance plug of the power cable into the appliance.
2. Insert the mains plug of the appliance into a nearby socket.

The connection data for the appliance can be found on the rating plate.

3. Check that the mains plug is inserted properly.

# Familiarising yourself with your appliance

## Appliance

You can find an overview of the parts of your appliance here.

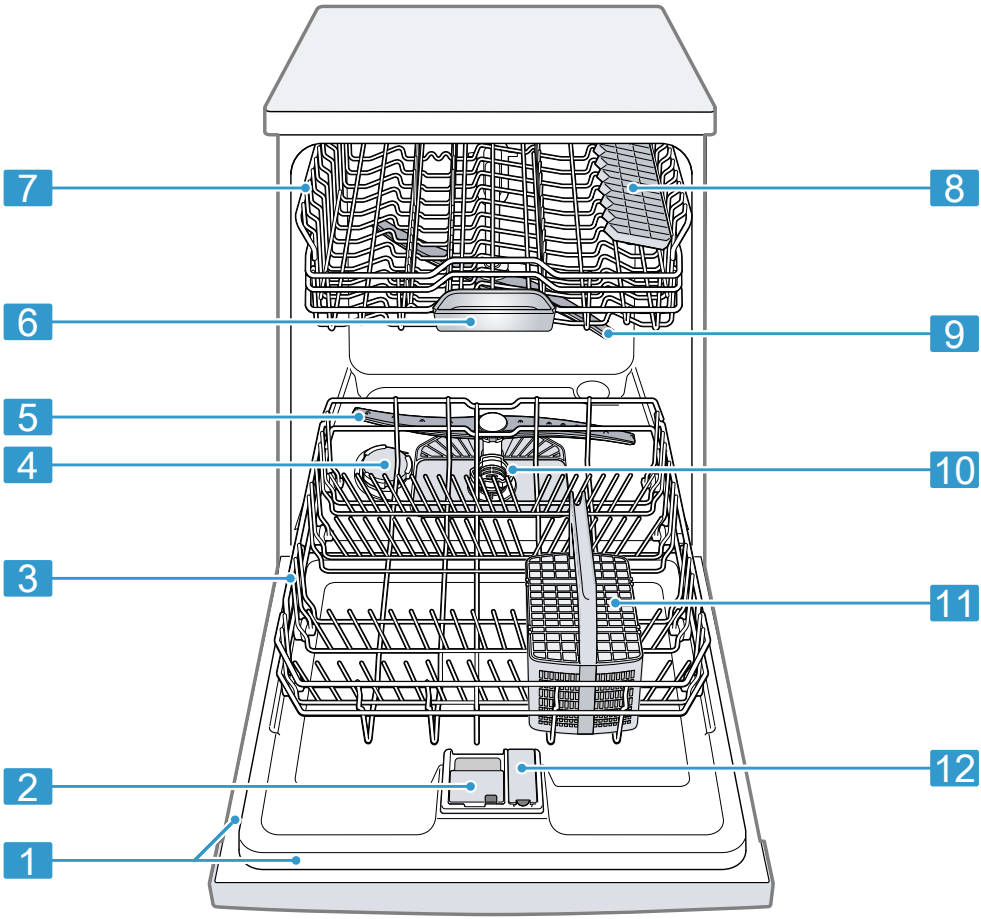


| | | |
|---|---|---|
| 1 | Rating plate | Rating plate with "E number and FD number"<br>→ *Page 50.*<br>The data you need for "Customer Service"<br>→ *Page 49.* |

[1] Depending on the appliance specifications

| | | |
|---|---|---|
| 2 | Detergent dispenser | "Detergent" → *Page 25* is added to the detergent dispenser. |
| 3 | Bottom basket | "Bottom basket" → *Page 19* |
| 4 | Dispenser for special salt | Add the special salt to the dispenser for special salt.<br>→ *"Water softening system", Page 21* |
| 5 | Lower spray arm | The lower spray arm washes the tableware in the bottom basket.<br>If the tableware has not been washed properly, clean the spray arms.<br>→ *"Cleaning spray arms", Page 36* |
| 6 | Tablet collecting tray | During the wash cycle tablets automatically fall out of the detergent dispenser into the tablet collecting tray where they can fully dissolve. |
| 7 | Top basket | Top basket |
| 8 | Cutlery shelf[1] | "Cutlery shelf" → *Page 20* |
| 9 | Upper spray arm | The upper spray arm washes the tableware in the top basket.<br>If the tableware has not been washed properly, clean the spray arms.<br>→ *"Cleaning spray arms", Page 36* |
| 10 | Filter system | "Filter system" → *Page 35* |
| 11 | Cutlery basket | "Cutlery basket" → *Page 20* |
| 12 | Dispenser for rinse aid | Add rinse aid to the dispenser for rinse aid.<br>→ *"Rinse aid system", Page 24* |

[1] Depending on the appliance specifications

## Controls

You can use the control panel to configure all functions of your appliance and to obtain information about the operating status.
With some buttons you can perform different functions.

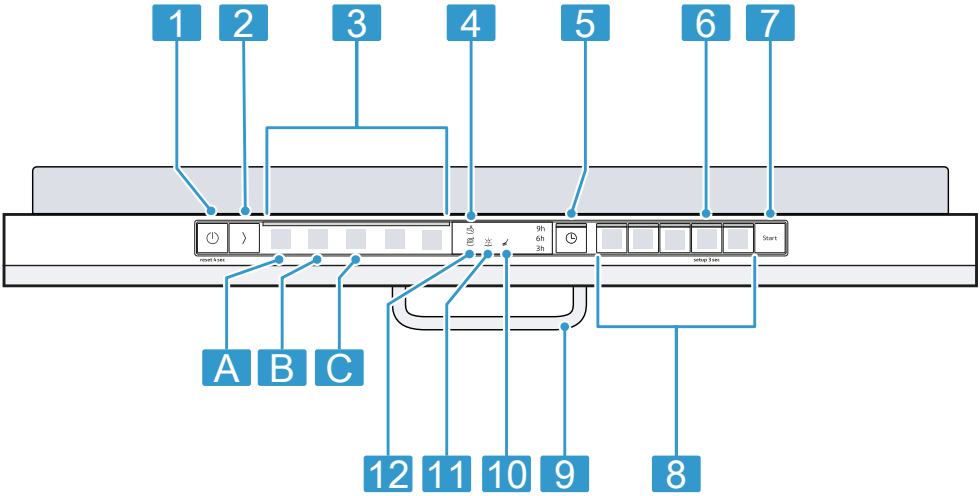


| | | |
|---|---|---|
| 1 | ON/OFF button ⏻ and reset button Reset 4 sec. | "Switching on the appliance" → *Page 29*<br>"Switching off the appliance" → *Page 31*<br>"Terminating the programme" → *Page 31* |
| 2 | Programme button | "Programmes" → *Page 17* |
| 3 | Programmes | "Programmes" → *Page 17* |
| 4 | Water supply display | Display for water supply |
| 5 | Timer programming[1] | "Setting timer programming" → *Page 30* |
| 6 | Setup 3 sec. button | If you press Setup 3 sec. for approx. 3 seconds, you can open the basic settings. |
| 7 | Start button Start | "Starting the programme" → *Page 30* |
| 8 | Programme buttons and additional functions | "Programmes" → *Page 17*<br>"Additional functions" → *Page 18* |
| 9 | Door opener[1] | "Opening the appliance door" → *Page 29* |
| 10 | Programme sequence display | The programme sequence display shows the current cycle of the appliance, e.g. washing. |
| 11 | Rinse aid refill indicator | "Rinse aid system" → *Page 24* |
| 12 | Special salt refill indicator | "Water softening system" → *Page 21* |

[1] Depending on the appliance specifications

# Programmes

You can find an overview of the programmes that can be selected here. Different programmes, which can be found on the control panel of your appliance, are available depending on the appliance configuration.
The running time may vary depending on the programme selected. The running time depends on the water temperature, the quantity of tableware, the level of soiling and the additional function selected. The runtime will change if the rinse aid system is switched off or rinse aid needs to be added.
The consumption values can be found in the quick reference guide. The consumption values relate to normal conditions and a water hardness of 9 - 20 °E. Different influencing factors such as water temperature or pipe pressure may result in deviations.

| Programme: | Use | Programme sequence | Additional functions |
|---|---|---|---|
| Chef<br>Chef 70 | Tableware:<br>■ Washing pots and pans, non-fragile tableware and cutlery.<br>Level of soiling:<br>■ Removing stubborn burned or dried-on food remnants containing starch and protein. | Intensive:<br>■ Pre-Rinse<br>■ Cleaning 70 °C<br>■ Intermediate rinse<br>■ Final rinse 72 °C<br>■ Extra Dry | Speed<br>→ *"Additional functions", Page 18* |
| Auto<br>Auto 45-65° | Tableware:<br>■ Cleaning mixed tableware and cutlery.<br>Level of soiling:<br>■ Removing common household food remnants lightly dried-on. | Sensor-controlled:<br>■ Optimised by sensors depending on the soiling of the rinsing water. | All<br>→ *"Additional functions", Page 18* |
| Eco<br>Eco 50° | Tableware:<br>■ Cleaning mixed tableware and cutlery.<br>Level of soiling:<br>■ Removing common household food remnants lightly dried-on. | Most economical programme:<br>■ Pre-Rinse<br>■ Cleaning 50 °C<br>■ Intermediate rinse<br>■ Final rinse 68 °C<br>■ Drying | All<br>→ *"Additional functions", Page 18* |

| Programme: | Use | Programme sequence | Additional functions |
|---|---|---|---|
| 1h<br>1 hr Programme | Tableware:<br>■ Cleaning mixed tableware and cutlery.<br>Level of soiling:<br>■ Removing common household food remnants lightly dried-on. | Time-optimised:<br>■ Cleaning 65 °C<br>■ Intermediate rinse<br>■ Final rinse 69 °C<br>■ Drying | Extra Dry<br>→ *"Additional functions", Page 18* |
| Easy Clean<br>Easy Clean | Only when using unloaded appliance. | Machine Care 70 °C | None |

**Note:** The relatively long running time in the Eco 50 ° programme is due to longer soaking and drying times. This results in optimal consumption values.

## Information for test institutes

Test institutes are provided with information for comparability tests, e.g. according to EN60436.
These are the conditions for conducting the tests, however they are not the results or consumption values.
E-mail enquiries to: dishwasher@test-appliances.com
The product number (E-Nr.) and the production number (FD) are required here. They can be found on the rating plate on the appliance door.

# Additional functions

You can find an overview of the additional functions that can be selected here. Different additional functions, which can be found on the control panel of your appliance, are available depending on the appliance configuration.

| Additional function | Use |
|---|---|
| Speed<br>Speed | ■ The run time is shortened by 15% to 75% depending on the rinse programme.<br>■ The additional function can be activated before the start of the programme and at any time when the programme is running.<br>■ Energy and water consumption are increased. |
| Power Zone<br>Power Zone | ■ Switch on with mixed loads containing tableware with different soiling levels, e.g. place very soiled pots and pans in the bottom basket and normally soiled tableware in the upper basket.<br>■ The spray pressure in the bottom basket is increased and the maximum programme temperature held longer. This will increase the run time and energy consumption. |

| Additional function | Use |
|---|---|
| Extra Dry<br>Extra Dry | ■ For a better drying result the final rinse temperature is increased and the drying phase extended.<br>■ Especially suitable for drying plastic parts.<br>■ There is a slight increase in energy consumption and the run time is extended. |

# Features

You can find an overview of the possible features of your appliance and how to use them here.
These features depend on the model of your appliance.

## Top basket

Arrange cups, glasses and small items of tableware in the top basket.

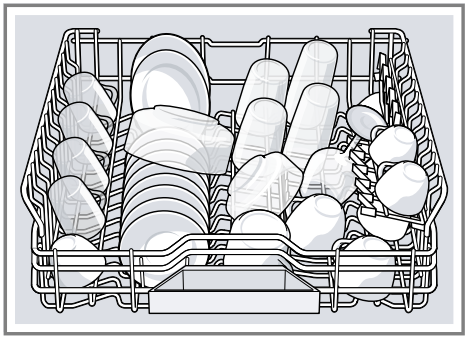

## Bottom basket

Arrange pans and plates in the bottom basket.

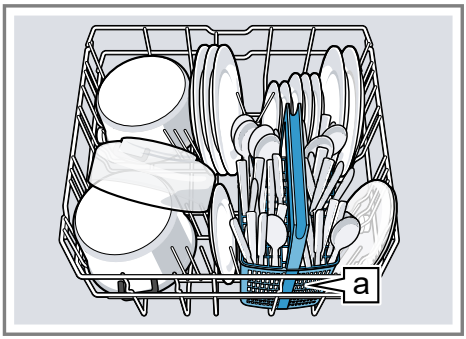


Cutlery basket a[1]

Large plates up to a diameter of 31 cm can be arranged in the bottom basket as shown.

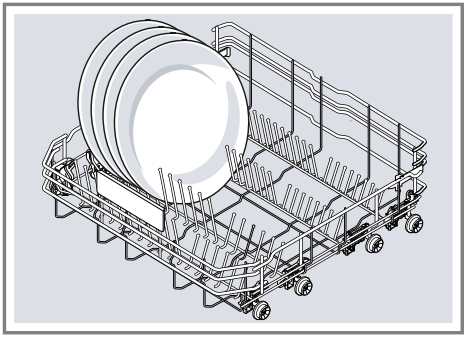

[1] Depending on the appliance specifications

## Cutlery basket

Arrange cutlery in the cutlery basket, always without sorting it and with the sharp points downwards.

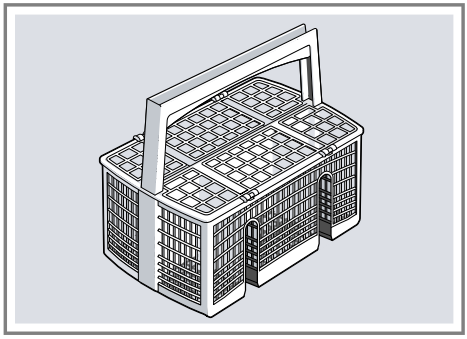

## Etagere

Use the cutlery shelf and space underneath for small cups and glasses or for large items of cutlery, e.g. cooking spoons or serving cutlery.

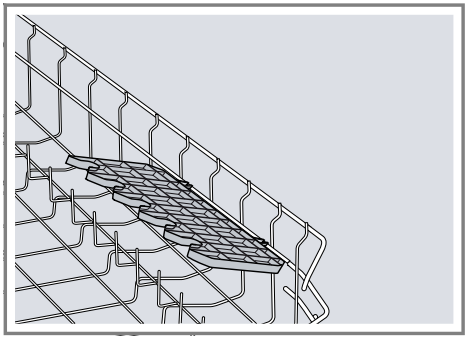

If you do not need the cutlery shelf, you can fold it up.

## Baking sheet spray head

Use the baking sheet spray head to clean large items of tableware, e.g. trays, grilles and plates.

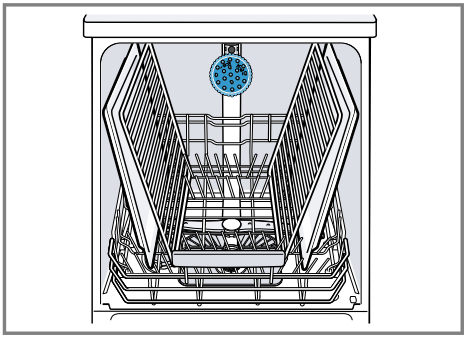

Arrange max. 2 baking sheets and 2 grilles as shown to ensure that the spray jet can reach all parts.

**Note:** Check that the appliance is always operated with the top basket or the baking sheet spray head.

### Inserting baking sheet spray head

Use the baking sheet spray head instead of the top basket to clean large trays, grilles and plates.

1. Remove top basket.
2. Insert the baking sheet spray head in the holder ① and turn to the right ②.

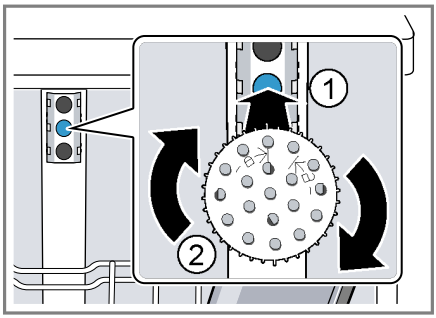


✔ The baking sheet spray head clicks into position.

### Removing baking sheet spray head

If you no longer require the baking sheet spray head, remove it from the appliance.

1. Turn the baking sheet spray head anticlockwise and remove from the holder.
2. Insert the top basket in the appliance.

## Before using for the first time

Configure the settings for initial start-up.

### Performing the initial configuration

On initial start-up or after a reset to the factory settings, you will need to make settings.

**Requirement:** "The appliance has been installed and connected." → *Page 11*

1. "Add special salt." → *Page 22*
2. "Add rinse aid." → *Page 24*
3. "Switch on the appliance." → *Page 29*
4. "Setting the water softening system." → *Page 22*
5. "Set the amount of rinse aid to be dispensed." → *Page 24*
6. "Add detergent" → *Page 25*.
7. Start the Programme with the highest cleaning temperature without tableware.

   To remove any marks from water or other residues, we recommend you operate the appliance without tableware before using it for the first time.

**Tip:** You can change these settings and other "Basic settings" → *Page 32* at any time.

## Water softening system

Hard water leaves limescale on the tableware as well as the washing tank and parts of the appliance may become blocked.
To ensure good dishwashing results, you can treat the water with special salt and the water softening system.
To avoid damage to the appliance, water with a hardness above 9 °E must be softened.

### Overview of water hardness settings

You can find an overview of the water hardness values that can be selected here.
You can find out how hard your water is from your local water company or by using a water hardness tester.

| Water hardness value °E | Hardness range | mmol/l | Setting | "LED A" → *Page 15* | "LED B" → *Page 15* | "LED C" → *Page 15* |
|---|---|---|---|---|---|---|
| 0 - 8 | Soft | 0 - 1.1 | 0 | ☐ | ☐ | ☐ |
| 9 - 20 | Medium | 1.2 - 2.9 | 1 | ■ | ☐ | ☐ |
| 21 - 26 | Hard | 3.0 - 3.7 | 2 | ■ | ■ | ☐ |

| Water hardness value °E | Hardness range | mmol/l | Setting | "LED A" → *Page 15* | "LED B" → *Page 15* | "LED C" → *Page 15* |
|---|---|---|---|---|---|---|
| 27 - 44 | Hard | 3.8 - 6.2 | 3 | | | |

**Note:** Set the water hardness determined on your appliance.
→ *"Setting the water softening system", Page 22*
With a water hardness of 0 - 8 °E you can dispense with special salt for dishwashers and switch off the water softening system.
→ *"Switching off the water softening system", Page 23*

## Setting the water softening system

Set the water hardness on your appliance.

1. Determine the water hardness and the appropriate setting value.
   → *"Overview of water hardness settings", Page 21*
2. Press ⏻.
3. To open the appliance settings, press Setup 3 sec. for 3 seconds.

✔ ⇆ is flashing on the display.

4. Press Start repeatedly until the right water hardness has been set.

   0, 1, 2 or 3 LEDs will light up accordingly.
   → *"Overview of water hardness settings", Page 21*
   The factory setting is level 1 ("LED A" → *Page 15*).
5. To save the settings, press Setup 3 sec. for 3 seconds.

## Special salt

You can use special salt to soften water.

### Adding special salt

If the special salt refill indicator lights up, add special salt to the dispenser for special salt just before the programme starts. The amount of special salt required depends on the water hardness: the higher the water hardness, the greater the amount of special salt required.

**ATTENTION!**

- Detergent may damage the water softening system.
  - ▸ Only fill the dispenser of the water softening system with special dishwasher salt.
- Special salt for dishwashers can damage the tub due to corrosion.
  - ▸ To make sure that any special salt that escapes is washed out of the tub, add the special salt to the dispenser for special salt immediately before the programme starts.

1. Unscrew the lid of the dispenser for special salt and remove.
2. On initial start-up: Fill the dispenser right up with water.

3. **Note:** Only use special salt for dishwashers.
   Do not use salt tablets.
   Do not use table salt.

   Add the special salt to the dispenser.

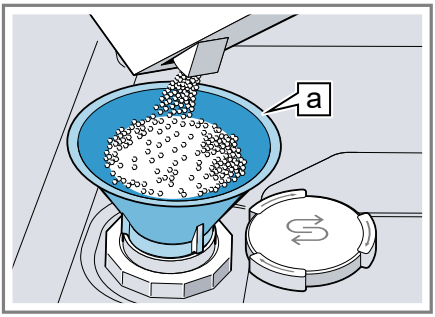


   Funnel a[1]

   Fill the dispenser right up with special salt. The water in the dispenser is displaced and forced out.
4. Place the lid back on the dispenser and turn to close.

## Switching off the water softening system

If you find the special salt refill indicator irritating, e.g. when using combined detergents with salt replacement substances, you can switch the salt refill indicator off.

**Note**
To avoid damage to the appliance, only switch off the water softening system in the following cases:

- The water hardness is max. 26 °E and you are using combined detergents with salt replacement substances. According to manufacturers, combined detergents with salt replacement substances can generally only be used up to a water hardness of 26 °E without adding special salt.
- The water hardness is 0 - 8 °E. You do not need to use special salt.

1. Press ⏻.
2. To open the appliance settings, press Setup 3 sec. for 3 seconds.
✔ ⇄ is flashing on the display.
3. Press Start repeatedly until no LED lights up (level 0).
   → *"Overview of water hardness settings", Page 21*
4. To save the settings, press Setup 3 sec. for 3 seconds.
✔ The water softening system is switched off and the salt refill indicator is deactivated.

## Regeneration of the water softening system

In order to obtain fault-free function of the water softening system, the appliance performs regeneration of the water softening system at regular intervals.
Regeneration of the water softening system takes place before the end of the main rinse cycle in all programmes. It will increase the run time and consumption values, e.g. water and electricity.

### Overview of consumption values with regeneration the water softening system

Here you can find an overview of the maximum additional run time and consumption values during regeneration of the water softening system.

| | |
|---|---|
| Regeneration of the water softening system after x rinse cycles | 5 |

[1] Depending on the appliance specifications

| | |
|---|---|
| Additional run time in minutes | 7 |
| Additional water consumption in litres | 5 |
| Additional power consumption in kWh | 0.05 |

The consumption values specified are laboratory measurements determined in accordance with the currently applicable standard and using the Eco 50° programme and the factory value of the water hardness is set to 9 - 20°E.

# Rinse aid system

## Rinse aid

For optimum drying results, use rinse aid.
Only use rinse aid for domestic dishwashers.

### Adding rinse aid

If the rinse aid refill indicator lights up, top up with rinse aid. Only use rinse aid for domestic dishwashers.

1. Press the catch on the lid of the dispenser for rinse aid ① and lift ②.

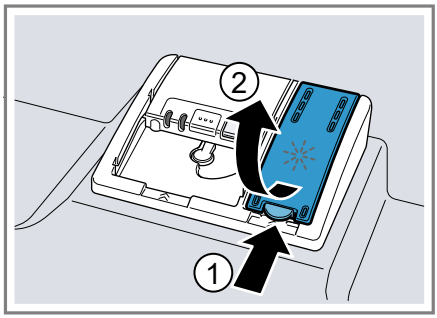


2. Add rinse aid up to the max mark.

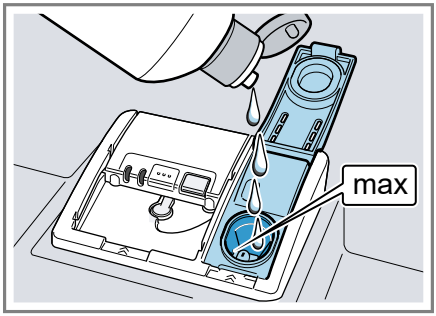


3. If rinse aid spills out, remove it from the tub.

   Spilled rinse aid can cause excessive frothing during the wash cycle.
4. Close the lid of the dispenser for rinse aid.
✔ The lid clicks into position.

## Setting the amount of rinse aid

If there are streaks or water marks on tableware, change the amount of rinse aid.

1. Press ⏻.
2. To open the appliance settings, press Setup 3 sec. for 3 seconds.
✔ ⇄ is flashing on the display.
3. Press Setup 3 sec. repeatedly until ✳ flashes.
4. Press Start repeatedly until the right amount of rinse aid has been set.

   0, 1, 2 or 3 LEDs will light up accordingly.
   The factory setting is level 2 ("LED A and LED B" → *Page 15*).
   – A low setting adds less rinse aid during the wash cycle and reduces streaking on tableware.

– A higher setting adds more rinse aid during the wash cycle, reduces water marks and improves the drying result.

5. To save the settings, press Setup 3 sec. for 3 seconds.

## Switching the rinse aid system off

If you find the rinse aid refill indicator irritating, e.g. when using combined detergents with a rinse aid component, you can switch the rinse aid system off.

**Tip:** The function of rinse aid is limited with combined detergents. You will generally get better results using rinse aid.

1. Press ⏻.
2. To open the appliance settings, press Setup 3 sec. for 3 seconds.
✔ ⇶ is flashing on the display.
3. Press Setup 3 sec. repeatedly until ✳ flashes.
4. Press Start repeatedly until no "LED" → *Page 15* lights up (level 0).
5. To save the settings, press Setup 3 sec. for 3 seconds.
✔ The rinse aid system is switched off and the rinse aid refill indicator is deactivated.

# Detergent

## Suitable detergents

Only use detergents that are suitable for dishwashers. Both separate and combined detergents are suitable. For optimum washing and drying results, use separate detergent, adding "Special salt" → *Page 22* and "Rinse aid" → *Page 24* separately.

Modern, powerful detergents mainly use a low-alkaline formulation with enzymes. Enzymes break down starch and remove protein. Oxygen-based bleaching agents are generally used to remove coloured marks, e.g. tea or ketchup.

**Note:** Follow the manufacturer's instructions for each detergent.

| Detergent | Description |
|---|---|
| Tabs | Tabs are suitable for all cleaning functions and do not need to be measured out.<br>With shorter "Programmes" → *Page 17* tabs sometimes do not dissolve entirely and leave residues of detergent. This may impair the cleaning effect. |
| Powder detergent | Powder detergent is recommended for shorter "Programmes" → *Page 17*.<br>The dosage can be adjusted to the level of soiling. |
| Liquid detergent | Liquid detergent works faster and is recommended for shorter "Programmes" → *Page 17* without PreRinse.<br>Sometimes liquid detergent may leak out despite the detergent dispenser being closed. This is not a fault and is non-critical if you remember the following:<br>■ Only choose a programme without PreRinse.<br>■ Do not select timer programming for starting the programme.<br>The dosage can be adjusted to the level of soiling. |

**Tip:** Suitable detergents are available online via our website or from "Customer Service" → *Page 49*.

### Separate detergents

Separate detergents are products that do not contain components other than detergent, e.g. powder detergent or liquid detergent.
With powder and liquid detergent the dosage can be individually adjusted to the level of soiling of the tableware.
For better washing and drying results and to avoid damage to the appliance, please additionally use "Special salt" → *Page 22* and "Rinse aid" → *Page 24*.

### Combined detergent

Besides conventional separate detergents, a number of products are available with additional functions. These products contain not only detergent but also rinse aid and salt replacement substances (3in1) and, depending on the combination (4in1, 5in1, ...), additional components such as glass protection or stainless steel cleaner.
According to manufacturers, combined detergents generally only function up to a water hardness of 26 °E. With a water hardness above 26 °E you will need to add special salt and rinse aid. For the best washing and drying results we recommend using special salt and rinse aid from a water hardness of 17 °E. If you are using combined detergent, the washing programme is adjusted automatically to ensure the best possible washing and drying result.

## Unsuitable detergents

Do not use detergent which could cause damage to the appliance or present a risk to health.

| Detergent | Description |
|---|---|
| Hand washing-up liquid | Hand washing-up liquid can cause increased frothing and damage the appliance. |
| Detergent containing chlorine | Chlorine residue on tableware may present a risk to health. |

## Information on detergents

Follow the instructions on detergents in everyday use.

- Detergents marked as "organic" or "ecological" (environmentally friendly) generally contain lower levels of active agents or completely dispense with certain substances. The cleaning effect may be restricted here.
- Set the rinse aid and the water softening system to the separate detergent or combined detergent in use.
- According to manufacturers, combined detergents with salt replacement substances can only be used up to a certain water hardness, usually 26 °E, without adding special salt. For the best washing and drying results we recommend using special salt from a water hardness of 17 °E.
- To prevent sticking, only touch detergents in a water-soluble pouch with dry hands and only ever place them in a dry detergent dispenser.
- Even if the rinse aid and special salt refill indicators light up, washing programmes will run properly with combined detergents.

- The function of rinse aid is limited with combined detergents. You will generally get better results using rinse aid.
- Use tablets with a special drying performance.

## Adding detergent

1. To open the detergent dispenser, press the locking latch.
2. Add the detergent to the dry detergent dispenser.

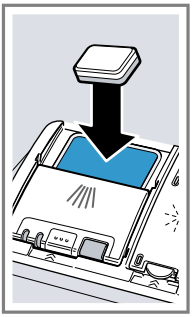

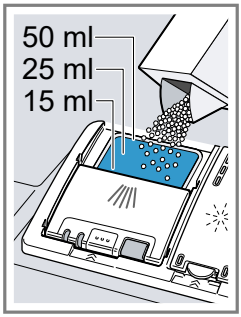


If you are using tablets, one is enough. Insert the tablets in a horizontal position.
If you are using powder or liquid detergent, follow the manufacturer's instructions and quantities for dosage in the detergent dispenser.
20 ml – 25 ml detergent is sufficient for normal soiling. If tableware is only lightly soiled, slightly less than the amount of detergent specified is usually sufficient.

3. Close the lid of the detergent dispenser.

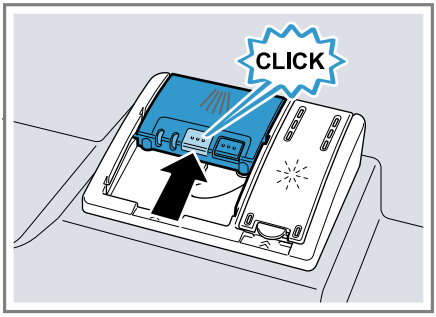


✔ The lid clicks into position.
✔ The detergent dispenser will open automatically at the optimum time during the programme. Powder or liquid detergent will spread around the washing tank and dissolve there. Tablets will fall into the tablet collecting tray and dissolve in the right dosage. In order to ensure that tablets can dissolve evenly, do not place any other objects in the tablet collecting tray.

**Tip:** If you use powder detergent and select a program with pre-rinse, you can also add a little detergent to the interior door of the appliance.

# Tableware

Only clean tableware that is suitable for dishwashers.

**Note:** Decorated glassware and parts made of aluminium or silver may fade or discolour with dishwashing. Delicate types of glass may turn cloudy after a few washing cycles.

## Damage to glass and tableware

Avoid damage to glass and tableware.

| Cause | Recommendation |
|---|---|
| The following tableware is not dishwasher-safe:<br>■ Items of cutlery and tableware made from wood<br>■ Decorated glassware, antique and hand-crafted tableware<br>■ Plastic parts not resistant to heat<br>■ Tableware made from copper or tin<br>■ Tableware soiled with ash, wax, lubricating grease or paint<br>■ Very small items of tableware | Only put tableware in the dishwasher if it is marked as dishwasher-safe by the manufacturer. |
| Glass and tableware was not dishwasher-safe. | Only put glasses and china in the dishwasher if it is marked as dishwasher-safe by the manufacturer. |
| The chemical composition of the detergent causes damage. | Use a detergent marked as gentle on tableware by the manufacturer. |
| Highly caustic alkaline or highly acidic cleaning agents, in particular commercial or industrial cleaning agents, are not suitable for dishwashers in conjunction with aluminium. | If you are using highly caustic alkaline or highly acidic cleaning agents, in particular commercial or industrial cleaning agents, do not put aluminium parts in the dishwasher interior. |
| The water temperature of the programme is too high. | Select a programme with lower temperatures.<br>After the programme has ended, take glassware and cutlery out of the appliance without delay. |

## Arrange tableware

Arrange tableware correctly to optimise the dishwashing result and prevent damage to both the appliance and tableware.

### Tips

- Using the appliance allows you to save energy and water compared to washing-up by hand.
- See our website for examples of how to load your appliance efficiently, free of charge.
- To save energy and water, load the machine with the number of place settings specified.
  → *"Technical specifications", Page 50*
- For better washing and drying results, position items with curves or recesses at an angle so water can run off.

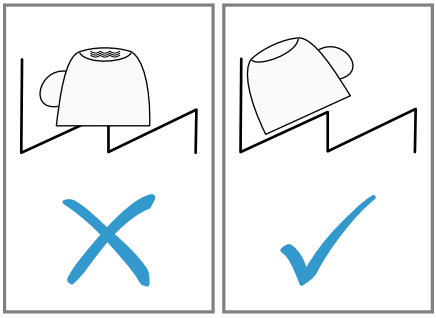

1. Remove large remnants of food from tableware.

To save resources, do not pre-rinse tableware under running water.

2. Observe the following when arranging tableware:
   - Put heavily soiled tableware in the bottom basket, e.g. pans. The more powerful the spray jet, the better the dishwashing result will be.
   - To prevent damage to tableware, arrange it so it is stable and cannot tip over.
   - To prevent injury, arrange cutlery with the points and sharp edges facing down.
   - Position containers with the openings facing down so no water can collect in them.
   - Do not block the spray arms - make sure that they can turn freely.
   - Do not place small parts in the tablet collecting tray and do not block it with tableware so as not to obstruct the lid of the detergent dispenser.

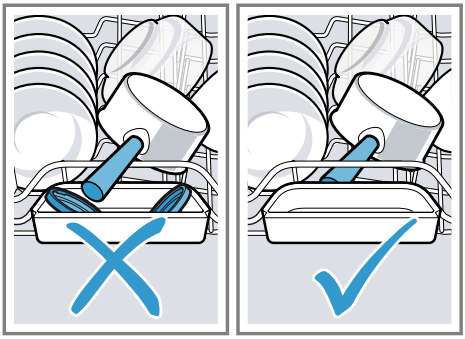

## Removing tableware

⚠ **WARNING**
**Risk of injury!**
Hot tableware can cause burns to the skin. When hot, tableware is sensitive to shock, may crack and can result in injury.

- When the programme has ended, do not empty the appliance until the tableware has cooled down for a while.

1. To prevent water dripping on the tableware, unload it starting at the bottom and working up.
2. Check the washing tank and accessories for soiling and clean if necessary.
   → *"Cleaning and servicing", Page 33*

# Basic operation

## Opening appliance door

- Open the appliance door.

## Switching on the appliance

- Press ⏻.

  The Eco 50° programme is set by default.
  The Eco 50° programme is an especially environmentally friendly programme and ideal for normally soiled tableware. It is the most efficient programme for the combination of energy/water consumption for this type of tableware and evidences conformity with the EU Ecodesign Directive.
  If you do not perform any actions on the appliance for 10 minutes, the appliance will automatically switch off.

## Setting a programme

To adjust the wash cycle to the soiling level of the tableware, select a suitable programme.

- ▸ Press the programme button repeatedly until the right programme has been selected.
  → *"Programmes", Page 17*
- ✔ The programme is set and the LED flashes.

## Setting additional functions

You can set additional functions to complete the washing programme selected.

**Note:** The additional functions which can be used depend on the programme selected.
→ *"Programmes", Page 17*

- ▸ Press the button for the relevant additional function.
  → *"Additional functions", Page 18*
- ✔ The additional function is set and the additional function button flashes.

## Setting timer programming[1]

You can delay the start of the programme by 3, 6 or 9 hours.

1. Press ◷ repeatedly until the relevant display lights up.
2. To activate timer programming, press Start.

**Note:** To deactivate timer programming, press ◷ repeatedly until none of the displays 3h, 6h or 9h light up.

## Starting the programme

- ▸ Press Start.
- ✔ While the programme is running, a spot of light is projected onto the floor below the appliance door. This light will not be visible if the appliance is installed at eye level with the cabinet front fitted flush.
- ✔ The programme has ended when no indicators on the controls light up.
- ✔ The programme has ended when the spot of light is no longer visible on the floor.

**Notes**

- If you want to add more tableware while the appliance is running, do not use the tablet collecting tray as a handle for the top basket. You might touch the partially dissolved tablet.
- You can only change a programme when running if you cancel it.
  → *"Terminate programme", Page 31*
- The appliance switches off automatically 1 minute after the end of the programme to save energy. If you open the appliance door immediately after the programme has ended, the appliance will switch off after 4 seconds.

## Interrupting programme

**Note:** When you open the appliance door once the appliance has heated up, leave the door slightly ajar for a few minutes and then close it. This will help prevent excess pressure building up in the appliance and stop the appliance door bursting open.

1. Press ⏻.
- ✔ The programme is saved and the appliance switches off.

[1] Depending on the appliance specifications

2. Press ⏻ to resume the programme.

## Terminate programme

To end a programme early or to switch from a programme that has already started, you will need to cancel it first.

1. Open the appliance door.
2. Press Reset 4 sec. for approx. 4 seconds.
3. Close the appliance door.

✔ All displays light up.
✔ As soon as the displays are off, the residual water is pumped out.
✔ The programme is cancelled and ends after approx. 1 minute.

## Switching off appliance

1. Please note the information on "Safe use" → *Page 10*.
2. Press ⏻.

**Tip:** If you press ⏻ during the wash cycle, the programme currently running will be interrupted. When you switch the appliance back on, the programme continues automatically.

# Basic settings

You can configure the appliance to meet your needs.

## Overview of basic settings

The basic settings depend on the features of your appliance.

| Basic setting | Selection | Description |
|---|---|---|
| Water hardness | Scale with 4 levels | Set the water hardness.<br>→ *"Setting the water softening system", Page 22* |
| Rinse aid disp. | Scale with 4 levels | Set the amount of rinse aid to be dispensed or switch off.<br>→ *"Setting the amount of rinse aid", Page 24* |
| Extra Dry | On<br>Off [1] | Switch Extra Dry on or off for each operation.<br>For a better drying result the temperature in the final rinse is increased. This may increase the running time slightly.<br>**Note:** Please take care with delicate tableware.<br>→ *"Setting Extra Dry", Page 32* |
| Tone volume | Scale with 4 levels | Adjustment of tone volume.<br>→ *"Setting signal volume", Page 33* |
| Factory setting | Reset | Restore changed settings to the factory settings.<br>The settings for initial start-up must be configured.<br>→ *"Restoring factory settings", Page 33* |

[1] Factory setting (may vary according to model)

### Setting Extra Dry

1. Press ⏻.
2. To open the appliance settings, press Setup 3 sec. for 3 seconds.
✔ ⊜ is flashing on the display.
3. Press Setup 3 sec. repeatedly until ⊜ and 🚰 flash in the display.
4. Press Start repeatedly until the LEDs show the right value.

   If "LED A" → *Page 15* is not lit, Extra Dry is switched off.
   If "LED A" → *Page 15* is lit, Extra Dry is switched on.
5. To save the settings, press Setup 3 sec. for 3 seconds.

### Setting signal volume

1. Press ⏻.
2. To open the appliance settings, press Setup 3 sec. for 3 seconds.
✔ ⊆ is flashing on the display.
3. Press Setup 3 sec. repeatedly until ⊆ and ✳ flash in the display.
4. Press Start repeatedly until the right signal volume has been set.

   0, 1, 2 or 3 LEDs will light up accordingly. The signal tone selected will be heard.
   The factory setting is level 2 ("LED A and LED B" → *Page 15*).
5. To save the settings, press Setup 3 sec. for 3 seconds.

### Restoring factory settings

1. Press ⏻.
2. To open the appliance settings, press Setup 3 sec. for 3 seconds.
✔ ⊆ is flashing on the display.
3. Press Setup 3 sec. repeatedly until 🚰, ⊆ and ✳ flash in the display.
4. Press Start to set the appliance back to the factory settings.
✔ The appliance is reset.

# Cleaning and servicing

To keep your appliance working efficiently for a long time, it is important to clean and maintain it carefully.

## Cleaning the tub

⚠ **WARNING**
**Risk of harm to health!**
Using detergents containing chlorine may result in harm to health.
▸ Never use detergents containing chlorine.

1. Remove any coarse soiling in the interior with a damp cloth.
2. Add detergent to the detergent dispenser.
3. Select the programme with the highest temperature.
   → *"Programmes", Page 17*
4. "Start the programme without tableware." → *Page 30*

## Cleaning products

Only use suitable cleaning products to clean your appliance.
→ *"Safe use", Page 10*

## Tips on appliance care

Follow the tips on appliance care to make sure your appliance functions properly at all times.

| Action | Benefit |
|---|---|
| Wipe the door seals, the front of the dishwasher and the control panel regularly using a damp cloth and washing-up liquid. | This ensures the parts of the appliance will remain clean and hygienic. |
| If the appliance is not going to be used for a while, leave the door slightly ajar. | This will prevent unpleasant odours. |

## Easy Clean Easy Clean

Deposits, e.g. from remnants of food and limescale, can cause your appliance to malfunction. To avoid such faults and reduce odours, we recommend cleaning your appliance at regular intervals.
Easy Clean combined with machine care products and machine cleaners is the right programme for the care of your appliance.

**Tip:** You can get our tested and approved Dishwasher Care and Machine Cleaner for Dishwashers online at https://www.neff-home.com/store or from customer service.

Easy Clean is a programme which removes various deposits in one washing cycle. Cleaning takes place in two phases:

| Phase | Removal of | Detergent | Placement |
|---|---|---|---|
| 1 | Grease and limescale | Liquid machine care product or machine descaler in powder form. | Appliance interior, e.g. bottle hung in the cutlery basket or powder in the interior. |
| 2 | Food remnants and deposits | Machine cleaner | Detergent dispenser |

To ensure optimum cleaning performance, the programme doses the detergents independently of each another during the relevant cleaning phase. Correct placement of the detergents is necessary here.
Run Easy Clean without tableware if the indicator for Easy Clean lights up on the control panel or if advised to do so by the display. The indicator will go out after you have run Easy Clean. If your appliance does not have a reminder function, we recommend performing Machine Care every 2 months.

### Running Easy Clean

Run the Easy Clean programme if the indicator for Easy Clean lights up on the control panel or if advised to do so by the display.

### Notes

- Run the Easy Clean programme without any tableware in the dishwasher.
- Only use machine care products and machine cleaners specially designed for dishwashers.
- Make sure that there are no aluminium parts, e.g. extractor hood grease filters or aluminium pans, in the interior of the appliance.
- If you have not run Easy Clean after 3 washing cycles, the indicator for Easy Clean will go out automatically.
- For optimum cleaning performance, ensure the correct placement of cleaners.
- Follow the safety instructions given on the packagings of the machine care products and machine cleaners.

1. Remove any coarse soiling in the interior with a damp cloth.
2. Clean the filters.
3. Place the machine care product in the appliance interior.

   Only use machine care products specially designed for dishwashers.
4. Pour the machine cleaner into the detergent dispenser until it is filled completely.

Do not place any additional machine cleaner in the appliance interior.

5. Press Easy Clean.
6. Press Start.

✔ Easy Clean is run.
✔ Once the programme has ended, the indicator for Easy Clean goes out.

## Filter system

The filter system removes coarse soiling from the dishwashing cycle.

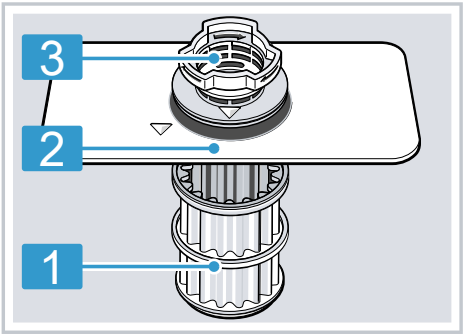


| | |
|---|---|
| 1 | Micro filter |
| 2 | Fine filter |
| 3 | Coarse filter |

### Cleaning filters

Soiling in the dishwashing water may block the filters.

1. After each wash check the filters for residue.
2. Turn the coarse filter anticlockwise ① and remove the filter system ②.
   – Check that no foreign objects fall into the sump.

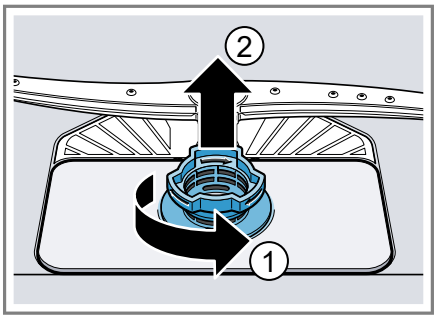


3. Pull down the micro filter to remove.

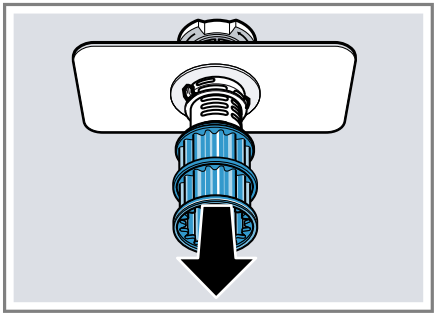

4. Press the locking catches ① together and lift the coarse filter out ②.

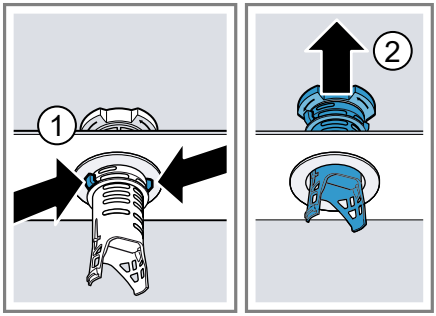


5. Clean the filter elements under running water.

Carefully clean the rim of dirt between the coarse and the fine filter.

6. Re-assemble the filter system.

   Make sure that the locking catches on the coarse filter click into position.

7. Insert the filter system into the appliance and turn the coarse filter clockwise.

   Make sure that the arrow markings match up.

## Cleaning spray arms

Limescale and soiling in the dishwashing water may block the nozzles and bearings on the spray arms. Clean the spray arms regularly.

1. Unscrew the upper spray arm ① and pull down to remove ②.

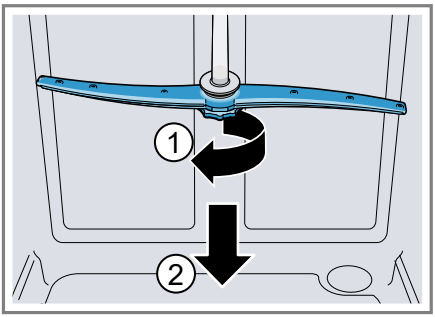


2. Pull up the lower spray arm to remove.

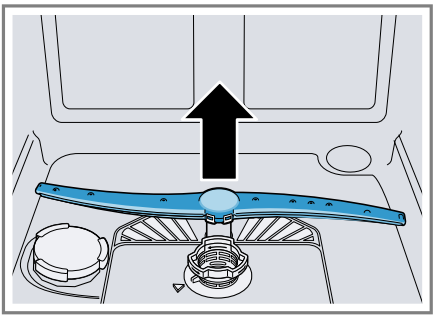

3. Check the outlet nozzles on the spray arms for blockages under running water and remove any foreign bodies.
4. Insert the lower spray arm.
✔ The spray arm clicks into position.
5. Insert the upper spray arm and screw it firmly in place.

# Troubleshooting

You can rectify minor faults on your appliance yourself. Read the troubleshooting information before contacting after-sales service. This will avoid unnecessary costs.

⚠ **WARNING**
**Risk of electric shock!**
Incorrect repairs are dangerous.
- Repairs to the appliance should only be carried out by trained specialist staff.
- Only use genuine spare parts when repairing the appliance.
- If the power cord of this appliance is damaged, it must be replaced with a special connection cable, which is available from the manufacturer or his Customer Service.

## Error code / Fault display / Signal

| Fault | Cause | Troubleshooting |
|---|---|---|
| Display for water supply lights up | Supply hose is kinked. | ▸ Install the supply hose without kinks. |
| | Water tap is turned off. | ▸ Turn on the water tap. |
| | Water tap is jammed or furred up. | ▸ Turn on the water tap. |
| | The filters in the water connection of the supply or AquaStop hose are blocked. | 1. Switch off the appliance.<br>2. Pull out the mains plug.<br>3. Turn off the water tap.<br>4. Unscrew the water connection.<br>5. Remove the filter from the supply hose<br> 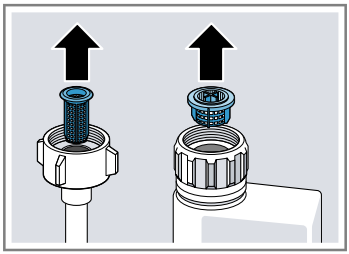 <br>6. Clean the filter.<br>7. Re-insert the filter in the supply hose.<br>8. Screw the water connection back on. |

| Fault | Cause | Troubleshooting |
|---|---|---|
| Display for water supply lights up | | 9. Check the water connection for leaks.<br>10. Restore the power supply.<br>11. Switch the appliance on. |
| | Wastewater hose is blocked or kinked. | 1. Reposition the wastewater hose without kinks.<br>2. Remove residues. |
| | Siphon connection is still sealed. | ► Check the connection to the siphon and open if necessary. |
| | Cover of the wastewater pump is loose. | ► Secure the cover of the "Wastewater pump " → *Page 48* so it clicks into position. |
| Display "Check water supply" flashes | A technical fault is present. | 1. Press ⏻.<br>2. Unplug the appliance or switch off the fuse.<br>3. Wait at least 2 minutes.<br>4. Insert the mains plug of the appliance in a socket or switch on the fuse.<br>5. Switch the appliance on.<br>6. If the problem occurs again:<br>– Press ⏻.<br>– Turn off the water tap.<br>– Pull out the mains plug.<br>– Contact "Customer Service" → *Page 49* and give the error code. |
| Displays flash | Appliance door is not closed properly. | ► Close the appliance door.<br>– Arrange the tableware so that no parts project beyond the basket and prevent the appliance door from closing properly. |

## Washing results

| Fault | Cause | Troubleshooting |
|---|---|---|
| Tableware is not dry. | No rinse aid used or dosage set too low. | 1. Add "Rinse aid" → *Page 24*.<br>2. Set the amount of rinse aid to be dispensed.<br>→ *"Setting the amount of rinse aid", Page 24* |

| Fault | Cause | Troubleshooting |
|---|---|---|
| Tableware is not dry. | Programme or programme option has no drying phase, or the drying phase is too brief. | ▶ "Select a programme with drying, e.g. intensive, strong or ECO programme." → *Page 17*<br>Some option buttons decrease the drying result, e.g varioSpeed. |
| | Water collects in recesses of the tableware or cutlery. | ▶ Position tableware at an angle where possible.<br> 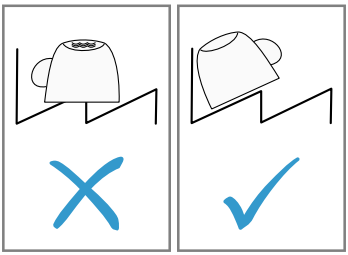 |
| | The combined detergent used has a poor drying performance. | **1.** Use rinse aid to improve drying performance.<br>**2.** Use a different combined detergent with a better drying performance. |
| | Extra Dry not activated to improve drying performance. | ▶ Activate Extra Dry. |
| | Tableware removed too early or drying process not yet ended. | **1.** Wait until the programme ends.<br>**2.** Only remove tableware 30 minutes after the programme has ended. |
| | Rinse aid used has a limited drying performance. | ▶ Use a name-brand rinse aid.<br>Eco products may have limited effectiveness. |
| Plastic tableware is not dry. | Not a fault. As plastic does not store heat so well, it also does not dry as well. | ▶ No remedial action possible. |
| Cutlery is not dry. | Cutlery not arranged properly in the cutlery basket or cutlery drawer. | Droplets can form on the cutlery contact points.<br>**1.** "Arrange cutlery individually where possible." → *Page 28*<br>**2.** Avoid points of contact. |

| Fault | Cause | Troubleshooting |
|---|---|---|
| Appliance interior still wet after wash cycle. | Not a fault. The condensation drying principle causes water droplets in the tub – they are indeed desirable here. The moisture in the air condenses on the inside walls, runs off and is pumped out. | No action required. |
| Remnants of food on tableware. | Tableware is placed too close together or basket is overfilled. | 1. Arrange tableware with sufficient space in between.<br>The spray jets must reach the surfaces of the tableware.<br>2. Avoid points of contact. |
| | Spray arm rotation is blocked. | ▶ Arrange tableware so that it does not obstruct spray arm rotation. |
| | Spray arm nozzles are blocked. | ▶ Clean the "Spray arms" → *Page 36*. |
| | Filters are soiled. | ▶ Clean the filters.<br>→ *"Cleaning filters", Page 35* |
| | Filters are inserted incorrectly and/or not engaged. | 1. Insert the filters properly.<br>→ *"Filter system", Page 35*<br>2. Engage the filters. |
| | Washing programme selected too weak. | ▶ Select a more intensive washing programme.<br>→ *"Programmes", Page 17* |
| | Tableware has been precleaned too intensely. The sensors chose a weaker programme. Stubborn soiling cannot be entirely removed. | ▶ Only remove large remnants of food and do not prerinse tableware. |
| | Tall narrow receptacles in corner areas are not rinsed adequately. | ▶ Do not position tall narrow receptacles at too great an angle or in corner areas. |
| | Top baskets on right and left are not set to same height. | ▶ Set the top baskets on the left and right to the same level. |

| Fault | Cause | Troubleshooting |
|---|---|---|
| Detergent residue in the appliance | Lid of the detergent dispenser is blocked by items of tableware parts and will not open. | **1.** Arrange tableware in the top basket tableware so the tab collecting tray is not obstructed by tableware. → *"Arrange tableware", Page 28*<br>Items of tableware are blocking the dispenser lid.<br>**2.** Do not place tableware or fragrance dispensers in the tablet collecting tray. |
| | The lid of the detergent dispenser is blocked by the tab and will not open. | ▶ Position the tab in the detergent dispenser crosswise, not vertically. |
| | Tabs are used in the quick or short programme. Dissolving time of the tab is not attained. | ▶ Select a more intensive "Programme" → *Page 17* or use "Powder detergent" → *Page 25*. |
| | Washing effect and dissolving performance are reduced after a prolonged storage time or detergent is very lumpy. | ▶ Change your "detergent" → *Page 25*. |
| Water marks on plastic parts. | Due to laws of physics droplet formation on plastic surfaces is unavoidable. After drying water marks are visible. | ▶ Select a more intensive programme. → *"Programmes", Page 17*<br>▶ Position tableware at an angle. → *"Arrange tableware", Page 28*<br>▶ Use rinse aid. → *"Rinse aid", Page 24*<br>▶ Set the water softening system higher. |
| Wipeable or water-soluble coatings are present inside the appliance or on the door. | Detergent substances are deposited there. These coatings cannot generally be removed with chemicals. | ▶ Change your "detergent" → *Page 25*.<br>▶ Clean the appliance mechanically. |
| | White coating is deposited in the appliance interior. | **1.** Set the water softening system correctly.<br>In most cases you will need to increase the setting.<br>**2.** Change your detergent if required. |
| | Special salt dispenser is not screwed tight. | ▶ Screw the special salt dispenser tight. |

| Fault | Cause | Troubleshooting |
|---|---|---|
| Stubborn white coatings are present on tableware, inside the appliance or the door. | Detergent substances are deposited there. These coatings cannot generally be removed with chemicals. | ▶ Change your "detergent" → *Page 25*.<br>▶ Clean the appliance mechanically. |
| | The hardness range is set incorrectly or the water hardness is greater than 44 °E (6,2 mmol/l). | ▶ Set the Water softening system to the water hardness or add special salt. |
| | 3in1/organic/eco detergent is not effective enough. | ▶ Set the Water softening system to the water hardness and use separate detergents (proprietary detergent, special salt, rinse aid). |
| | Too little detergent is being used. | ▶ Increase the amount of detergent used or change "Detergent " → *Page 25*. |
| | Washing programme selected too weak. | ▶ Select a more intensive washing programme. → *"Programmes", Page 17* |
| Tea residue or lipstick marks on tableware. | Washing temperature is too low. | ▶ Select a programme with a higher washing temperature. → *"Programmes", Page 17* |
| | Too little detergent is being used or is unsuitable. | ▶ Use a suitable "Detergent " → *Page 25* and follow the manufacturer's instructions for the amount to be used. |
| | Tableware has been precleaned too intensely. The sensors chose a weaker programme. Stubborn soiling cannot be entirely removed. | ▶ Only remove large remnants of food and do not prerinse tableware. |
| Coloured coatings (blue, yellow, brown) that are difficult or impossible to remove are present inside the appliance or on stainless steel tableware. | The formation of films is due to substances contained in vegetables (cabbage, celery, potatoes, noodles, etc.) or tap water (manganese). | ▶ Clean the appliance.<br>You can remove deposits with "Mechanical cleaning" → *Page 33* or a machine cleaning product. It may not always be possible to completely remove deposits but they are harmless to health. |
| | The formation of films is due to metal components on silver or aluminium tableware. | ▶ Clean the appliance.<br>You can remove deposits with "Mechanical cleaning" → *Page 33* or a machine cleaning product. It |

| Fault | Cause | Troubleshooting |
|---|---|---|
| Coloured coatings (blue, yellow, brown) that are difficult or impossible to remove are present inside the appliance or on stainless steel tableware. | | may not always be possible to completely remove deposits but they are harmless to health. |
| Coloured deposits (yellow, orange, brown) that are easy to remove are present inside the appliance (mainly at the bottom). | The formation of films is due to ingredients of food remnants and tap water (limescale) "soaplike". | **1.** Check the setting of the water softening system.<br>**2.** Add special salt.<br>→ *"Adding special salt", Page 22*<br>**3.** If you are using combined detergents (tabs), activate the water softening system.<br>Follow the information about detergents.<br>→ *"Information on detergents", Page 26* |
| Plastic parts inside the appliance are discoloured. | Plastic parts inside the appliance may become discoloured during the life of the dishwasher. | ▶ Discolouration can come about and will not impair functioning of the appliance. |
| Plastic parts are discoloured. | Washing temperature is too low. | ▶ Select a programme with a higher washing temperature.<br>→ *"Programmes", Page 17* |
| | Tableware has been precleaned too intensely. The sensors chose a weaker programme. Stubborn soiling cannot be entirely removed. | ▶ Only remove large remnants of food and do not prerinse tableware. |
| Removable streaks are present on glasses, glassware with a metallic appearance and cutlery. | Amount of rinse aid to be dispensed is set too high. | ▶ Set the rinse aid system to a lower setting. |
| | No rinse aid has been added. | ▶ → *"Adding rinse aid", Page 24* |
| | Detergent residue is present in the final rinse. Lid of the detergent dispenser is blocked by tableware items and will not open fully. | **1.** Arrange tableware in the top basket tableware so the tab collecting tray is not obstructed by tableware.<br>→ *"Arrange tableware", Page 28*<br>Items of tableware are blocking the dispenser lid.<br>**2.** Do not place tableware or fragrance dispensers in the tablet collecting tray. |

| Fault | Cause | Troubleshooting |
|---|---|---|
| Removable streaks are present on glasses, glassware with a metallic appearance and cutlery. | Tableware has been pre-cleaned too intensely. The sensors chose a weaker programme. Stubborn soiling cannot be entirely removed. | ▶ Only remove large remnants of food and do not prerinse tableware. |
| Irreversible clouding of glassware. | Glasses are not dishwasher-proof, only suitable for dishwashers. | ▶ Use dishwasher-proof glasses.<br>Glasses are usually only suitable for use in a dishwasher, i.e. long-term wear or long-term changes must be expected.<br>▶ Avoid a lengthy steam phase (standing time after wash cycle ends).<br>▶ Use a programme with a lower temperature.<br>→ *"Programmes", Page 17*<br>▶ Set the softening system to the water hardness.<br>▶ Use detergent with a glass protection component. |
| Rust spots on cutlery. | Cutlery is not sufficiently rust-resistant. Knife blades are often more severely affected. | ▶ Use rust-resistant tableware. |
| | Cutlery may also rust if washed together with rusting items. | ▶ Do not wash rusting items. |
| | Salt content in washing water is too high. | 1. Remove any spilled special salt from the tub.<br>2. Screw the cap of the special salt dispenser on tight. |
| Detergent residue is present in the detergent dispenser or the tablet collecting tray. | Spray arms were blocked by tableware so detergent was not rinsed out. | ▶ Check that the spray arms are not blocked and can rotate freely. |
| | Detergent dispenser was damp when detergent was added. | ▶ Only add detergent to a detergent dispenser when dry. |
| Excessive formation of foam occurs. | Hand washing-up liquid is present in dispenser for rinse aid. | ▶ Immediately add rinse aid to the dispenser.<br>→ *"Adding rinse aid", Page 24* |
| | Rinse aid has been spilled. | ▶ Remove the rinse aid with a cloth. |

| Fault | Cause | Troubleshooting |
|---|---|---|
| Excessive formation of foam occurs. | Detergent or appliance care product used causes excessive foaming. | ▶ Change the brand of detergent. |

## Information on display panel

| Fault | Cause | Troubleshooting |
|---|---|---|
| Special salt refill indicator lights up. | Insufficient special salt. | ▶ Add "Special salt" → *Page 22*. |
| | Sensor does not detect special salt tablets. | ▶ Do not use special salt tablets. |
| Refill indicator for special salt does not light up. | Water softening system is switched off. | ▶ Setting the water softening system |
| Refill indicator for rinse aid lights up. | Insufficient rinse aid. | 1. Add "Rinse aid" → *Page 24*.<br>2. Set the amount of rinse aid to be dispensed.<br>→ *"Setting the amount of rinse aid", Page 24* |
| Refill indicator for rinse aid does not light up. | Rinse aid system is switched off. | ▶ Set the amount of rinse aid to be dispensed. |

## Malfunctions

| Fault | Cause | Troubleshooting |
|---|---|---|
| Water is left in the appliance at the end of the programme. | Filter system or area under the filters is blocked. | 1. Clean the "Filters" → *Page 35*.<br>2. Clean the "Wastewater pump" → *Page 48*. |
| | Programme has not yet ended. | ▶ Wait until the programme ends or cancel the programme with **Reset**.<br>▶ → *"Terminate programme", Page 31* |
| Appliance cannot be switched on or operated. | Appliance functions have failed. | 1. Pull out the mains plug or switch off the fuse.<br>2. Wait at least 2 minutes.<br>3. Connect the appliance to the power supply.<br>4. Switch the appliance on. |
| Appliance does not start. | The mains fuse has tripped. | ▶ Check the relevant fuse. |
| | Mains cable is not inserted. | 1. Check whether the socket works.<br>2. Check whether the mains cable is properly inserted in the socket and on the rear of the appliance. |

| Fault | Cause | Troubleshooting |
|---|---|---|
| Appliance does not start. | Appliance door is not closed properly. | ▶ Close the appliance door. |
| Programme starts automatically. | You did not wait until programme ended. | ▶ → *"Terminate programme", Page 31* |
| Appliance stops during the programme or cuts out. | Appliance door is not closed properly. | ▶ Close the appliance door. |
| | Power and/or water supply has been interrupted. | 1. Check the power supply.<br>2. Check the water supply. |
| | Top basket is pressing against inner door and preventing appliance door from being closed securely. | ▶ Check whether the rear panel of the appliance is being pressed in by a socket or hose holder that has not been removed.<br>▶ Arrange the tableware so that no parts project beyond the basket and prevent the appliance door from closing properly. |

## Mechanical damage

| Fault | Cause | Troubleshooting |
|---|---|---|
| Appliance door cannot be closed. | Door lock has been activated. | ▶ Close the appliance door with greater force. |
| | Door cannot be closed due to installation method. | ▶ Check whether the appliance has been installed properly.<br>When closed, the appliance door, its decor or attached parts should not knock against adjacent cabinets or the worktop. |
| Lid on the detergent dispenser cannot be closed. | Detergent dispenser or lid are blocked by sticky detergent residue. | ▶ Remove detergent residue. |

## Noise

| Fault | Cause | Troubleshooting |
|---|---|---|
| Filling valves making knocking noises. | Caused by the domestic installation. No appliance fault present. Does not affect functioning of the appliance. | ▶ Can only be remedied in the domestic installation. |
| Knocking or rattling noise. | Spray arm is striking tableware. | ▶ Arrange tableware so that the spray arms do not strike tableware. |

| Fault | Cause | Troubleshooting |
|---|---|---|
| Knocking or rattling noise. | With a small load the water jets directly strike against the tub. | ▶ Distribute the tableware evenly.<br>▶ Load the appliance with more tableware. |
| | Light items of tableware move about during the wash cycle. | ▶ Position light items of tableware securely. |

## Clean wastewater pump

Large remnants of food or foreign bodies can block the waste water pump. As soon as the rinsing water no longer drains properly, the waste water pump must be cleaned.

⚠ **WARNING**
**Risk of injury!**
Sharp and pointed objects or fragments of glass may block the waste water pump and cause injury.
- Remove any foreign bodies carefully.

1. Disconnect the appliance from the power supply.
2. Remove the top and bottom basket.
3. Remove the filter system.
4. Scoop out any water.
   Use a sponge if necessary.
5. Prise off the pump cover using a spoon and grip it by the crosspiece.

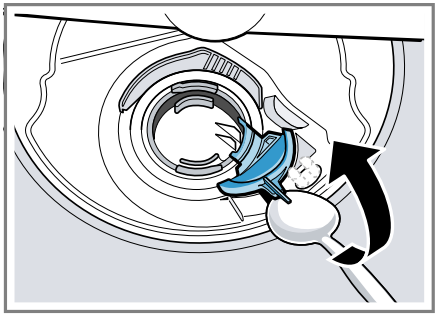

6. Lift the pump cover inwards at an angle and remove.
7. Remove any remnants of food and foreign bodies in the area of the impeller.
8. Insert the pump cover ① and press down ②.

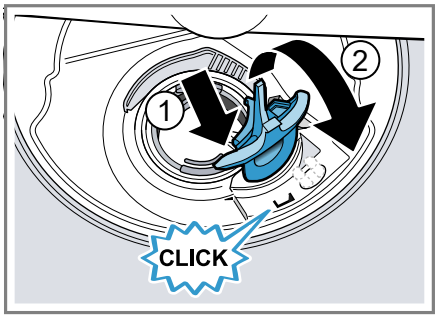


✔ The pump cover clicks into position.
9. Install the filter system.
10. Insert the top and bottom basket.

# Transportation, storage and disposal

You can find out here how to prepare your appliance for transportation and storage. You will also find out how to dispose of old appliances.

## Removing the appliance

1. Disconnect the appliance from the mains power supply.
2. Turn off the water tap.
3. Detach the drainage connection.
4. Detach the drinking water connection.
5. Loosen any screws fastening the appliance to cabinet parts.
6. Remove the base panel if fitted.
7. Pull the appliance out carefully, along with the hose behind it.

## Protect appliance from frost

If there is a risk of frost where the appliance will be standing, e.g. in a holiday home, empty the appliance completely.

- Empty the appliance.
  → *"Transporting the appliance", Page 49*

## Transporting the appliance

To avoid damage to the appliance, empty it before transporting.

**Note:** Always transport the dishwasher upright to prevent residual water getting into the machine's controls and damaging the appliance.

1. Remove tableware from the appliance.
2. Secure loose parts.
3. "Switch on the appliance."
   → *Page 29*
4. Select the programme with the highest temperature.
   → *"Programmes", Page 17*
5. "Start the programme." → *Page 30*
6. To drain the appliance, terminate the programme after approx. 4 minutes.
   → *"Terminate programme", Page 31*
7. "Switch off the appliance."
   → *Page 31*
8. Turn off the water tap.
9. To empty the residual water out of the appliance, detach the supply hose and let the water drain out.

## Disposing of old appliance

Valuable raw materials can be reused by recycling.

⚠ **WARNING**
**Risk of harm to health!**
Children can lock themselves in the appliance, thereby putting their lives at risk.

- With redundant appliances, unplug the power cord. Then cut through the cord and damage the lock on the appliance door beyond repair so that the appliance door will no longer close.

1. Unplug the appliance from the mains.
2. Cut through the power cord.
3. Dispose of the appliance in an environmentally friendly manner.

   Information about current disposal methods are available from your specialist dealer or local authority.

This appliance is labelled in accordance with European Directive 2012/19/EU concerning used electrical and electronic appliances (waste electrical and electronic equipment - WEEE). The guideline determines the framework for the return and recycling of used appliances as applicable throughout the EU.

# Customer Service

If you have any queries, are unable to rectify faults on the appliance yourself or if your appliance needs to be repaired, contact Customer Service. Function-relevant genuine spare parts according to the corresponding Ecodesign Order can be obtained from Customer Service for a period of at

least 10 years from the date on which your appliance was placed on the market within the European Economic Area.

**Note:** Under the terms of the manufacturer's warranty the use of Customer Service is free of charge.

Detailed information on the warranty period and terms of warranty in your country is available from our after-sales service, your retailer or on our website.
If you contact Customer Service, you will require the product number (E-Nr.), the production number (FD) and the consecutive numbering (Z-Nr.) of your appliance.
The contact details for Customer Service can be found in the enclosed Customer Service directory or on our website.

### Product number (E-Nr.), production number (FD) and consecutive numbering (Z-Nr.)

You can find the product number (E-Nr.), the production number (FD) and the consecutive numbering (Z-Nr.) on the appliance's rating plate.
The rating plate is located inside the appliance door.
Make a note of your appliance's details and the Customer Service telephone number to find them again quickly.

### AQUA-STOP guarantee

In addition to warranty claims against the seller under the purchase agreement and in addition to our manufacturer's warranty, we offer compensation under the following conditions.

- If our Aqua-Stop system is defective and causes water damage, we will make good the damage for private users. To ensure protection from water damage, the appliance must be connected to the power supply.
- The liability guarantee is valid for the service life of the appliance.
- A claim can only be made under the guarantee if the appliance has been correctly installed and connected with Aqua-Stop according to our instructions; this also includes correctly fitting the Aqua-Stop extension (genuine accessory). Our guarantee does not cover defective supply lines or fittings up to the Aqua-Stop connection on the tap.
- If your appliance is fitted with Aqua-Stop, you can in principle leave your appliance unattended during operation and the tap turned on afterwards. The tap only needs to be turned off if you are away from home for a long period, e.g. on holiday for several weeks.

## Technical specifications

| | |
|---|---|
| Weight | Max.: 60 kg |
| Voltage | 220 - 240 V, 50 Hz or 60 Hz |
| Power rating | 2000 - 2400 W |
| Fuse | 10 - 16 A |
| Water pressure | ■ Min. 0.05 MPa (0.5 bar)<br>■ Max. 1 MPa (10 bar) |
| Inlet rate | Min. 10 l/min |
| Water temperature | Cold water.<br>Hot water max.: 60 °C |
| Capacity | 12 place settings |

You can find more information about your model online at https://eprel.ec.europa.eu/[1]. This web address is linked to the official EU EPREL product database. Please then follow the instructions on searching for models. The model identifier is made up of the characters before the slash in the product number (E-Nr.) on the rating plate. Alternatively, you can also find the model identifier in the first line of the EU energy label.

## Information regarding Free and Open Source Software

This product includes software components that are licensed by the copyright holders as free or open source software.
The applicable licence information is stored on your home appliance. You can also access the applicable licence information via your Home Connect app: "Profile -> Legal information -> Licence Information".[2] You can download the licence information on the brand product website. (Please search on the product website for your appliance model and additional documents). Alternatively, you can request the relevant information from ossrequest@bshg.com or BSH Hausgeräte GmbH, Carl-Wery-Str. 34, 81739 Munich, Germany.
The source code will be made available to you on request.
Please send your request to ossrequest@bshg.com or BSH Hausgeräte GmbH, Carl-Wery-Str.34, 81739 Munich, Germany.
Subject: „OSSREQUEST“

The cost of performing your request will be charged to you. This offer is valid for three years from the date of purchase or at least as long as we offer support and spare parts for the respective appliance.

[1] Only applies to countries in the European Economic Area

[2] Depending on the appliance specifications

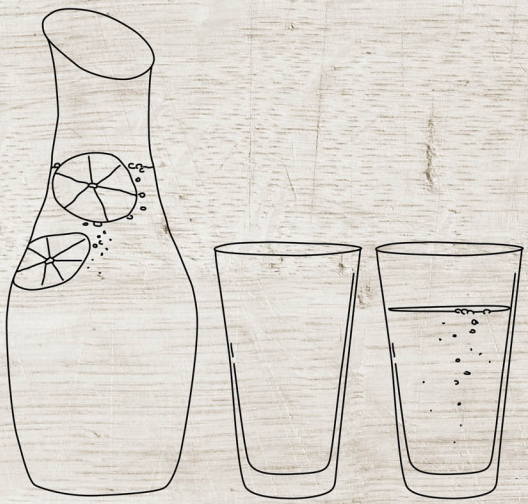

**Constructa-Neff Vertriebs-GmbH**
Carl-Wery-Straße 34
81739 München
GERMANY
Valid within Great Britain:
Imported to Great Britain by
BSH Home Appliances Ltd.
Grand Union House
Old Wolverton Road
Wolverton, Milton Keynes
MK12 5PT
United Kingdom

REGISTER YOUR PRODUCT
ONLINE NEFF-HOME.COM

**9001679289**
en
010817
642 E5